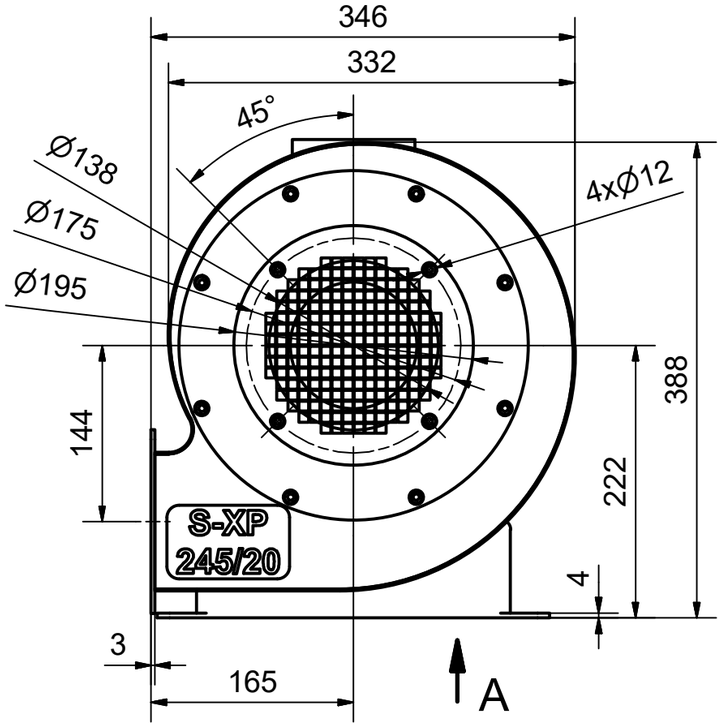

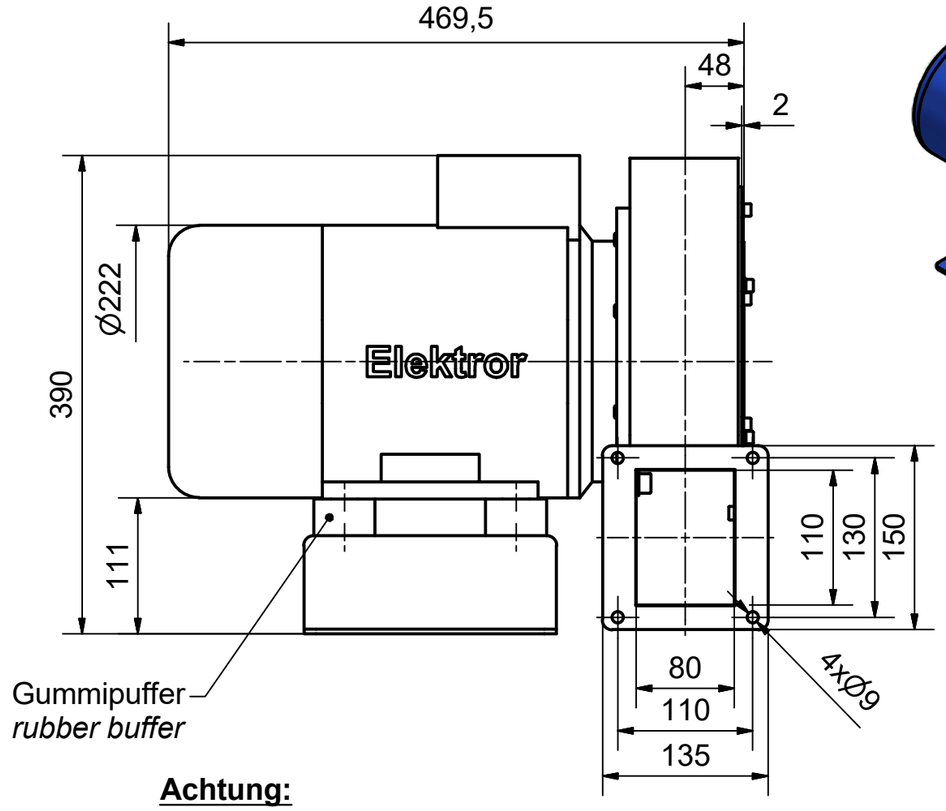

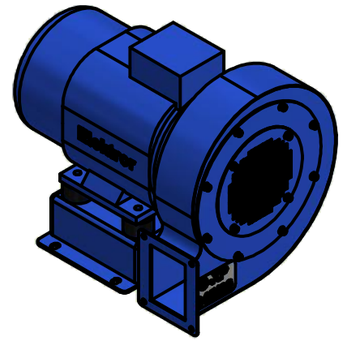

Achtung:
Gummipuffer nicht auf Scherung belasten. Nur mit horizontaler Motorwelle betreiben.

Attention:
Rubber buffer not on shear burden. Only with horizontal Operate the motor shaft.

A (1 : 5)

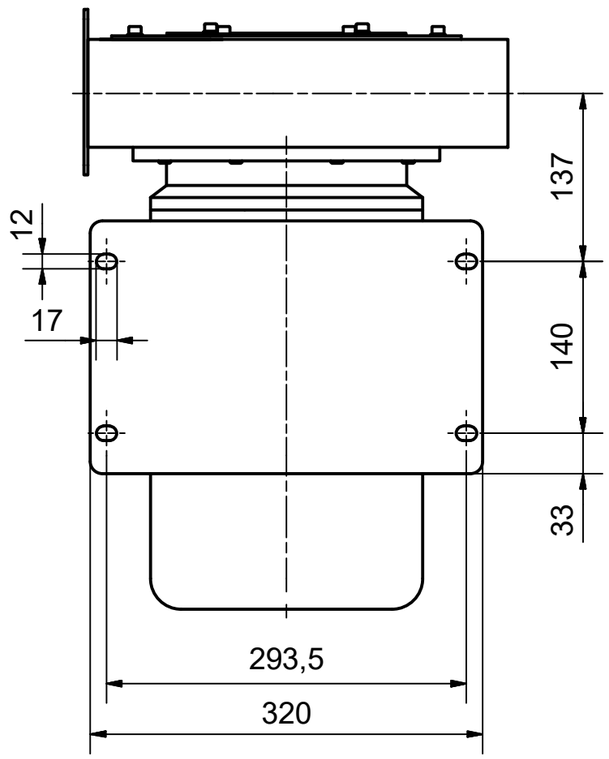

Maße in mm - unverbindlich. Änderungen vorbehalten.
Dimensions in mm - subject to modifications. Changes reserved.

Revision	-				
Without our permission, this drawing may not be copied or reproduced, nor communicated or made accessible to third parties, in particular competitors. Illegal use by the recipient or third party has civil and criminal consequences. All dimensions are in mm and non-binding. Technical changes reserved.					
general tolerances DIN ISO 2768-mk	workpiece edges DIN ISO 13715 outer edges -0,2 inner edges +0,4				
	KG		27,032		
raw material	weight unit		weight	material-no.	blower type
ISO 8015: 2011	scale		date	name	Elektror airsystems gmbh
	1 : 5	proc.	14.05.2019	ROTHT	
	A3	audited	15.05.2019	ROTHT	
S-XP 245/20-250/18,5, LG270 (Ar), BG112M				1124258-CDD-000	index -
				replaced by	
				replaced	
SAP DType IDWMN					